DYNATECT®
DYNAMIC EQUIPMENT PROTECTION

GORTITE® FIRE HOSE BED | QUOTE REQUEST FORM

Date _____
Company Name _____
Contact _____
Quantity _____

Address _____
City _____ State/Prov. _____
Country _____ Zip/Postal Code _____
Telephone _____ Fax _____
Email _____

SPACE REQUIREMENTS

L (LENGTH)	D (DEPTH)	H (HEIGHT)
up to 86"	13.75"	14.5"
86.01" to 109.0"	14.875"	16.0"
109.01" to 132.0"	16.25"	17.25"
132.01" to 155.0"	17.75"	18.75"
155.01" to 178.0"	19.5"	18.5"
178.01" to 201.0"	21.0"	20.25"
201.01" to 224.0"	22.5"	21.5"

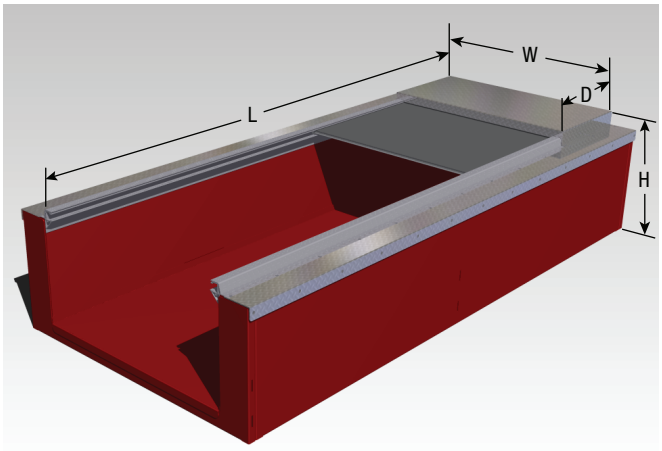

Dimensions

Length: _____

Width: _____

Depth: _____

REV11.17